| Pos | Name | Standard | Material | Leister | Bossard |
|---|---|---|---|---|---|
| 100 | Hex socket cap screw M8 x 30 | ISO 4762 | INOX A2 | 103.519 | 1233459 |
| 101 | Hex socket cap screw M6 x 16 | ISO 4762 | INOX A2 | 106.731 | 1233351 |
| 102 | Hex socket cap screw M5 x 12 | ISO 4762 | INOX A2 | 100.373 | 1233289 |
| 103 | Hex socket cap screw M4 x 8 | ISO 4762 | INOX A2 | 102.139 | 1233181 |
| 104 | Hex socket cap screw M5 x 20 | ISO 4762 | INOX A2 | 101.025 | 1233300 |
| 105 | Hex socket cap screw M3 x 8 | ISO 4762 | INOX A2 | 120.744 | 1233114 |
| 106 | Hex socket cap screw M6 x 30 | ISO 4762 | INOX A2 | 100.927 | 1032844 |
| 107 | Countersunk screw M4 x 12 | ISO 10642 | INOX A2 | 129.471 | 1235206 |
| 108 | Hex socket cap screw M10 x 20 | ISO 4762 | INOX A2 | 104.259 | 1233491 |
| 109 | Hexagonal nut M8 x 6.5 | ISO 4032 | INOX A2 | 100.321 | 1241508 |
| 110 | Washer M8 (8.4/16/1.6) | ISO 7089 | INOX A2 | 100.322 | 1965557 |
| 111 | Countersunk screw M5 x 10 | ISO 10642 | INOX A2 | 120.790 | 1235249 |
| 112 | Hex socket cap screw M4 x 6 | ISO 4762 | INOX A2 | 120.808 | 1233173 |
| 113 | Hex socket cap screw M4 x 10 | ISO 4762 | INOX A2 | 120.809 | 1233203 |
| 114 | Washer M4 (4.3/9/0.8) | ISO 7089 | INOX A2 | 100.139 | 1253204 |

| Pos | Name | Standard | Material | Leister | Bossard |
|---|---|---|---|---|---|
| 115 | Hex socket cap screw M4 x 20 | ISO 4762 | INOX A2 | 106.732 | 1233246 |
| 116 | Hex socket cap screw M5 x 16 | ISO 4762 | INOX A2 | 100.424 | 1233297 |
| 117 | Washer M6 (6.4/12/1.6) | ISO 7089 | INOX A2 | 100.951 | 1965549 |
| 118 | Hexagonal nut M10 x 8 | ISO 4762 | INOX A2 | 107.730 | 1241516 |

| | |
|---|---|
| & **KP 1 K-20** | Apply multi purpose grease<br>Mit Universalfett schmieren |
| @ **Loctite 242** | Medium strength threadlocker<br>Schraubensicherung mittelfest |

Standard components can no longer be ordered as a single unit.
They are only available on request and restricted to a minimum order quantity.

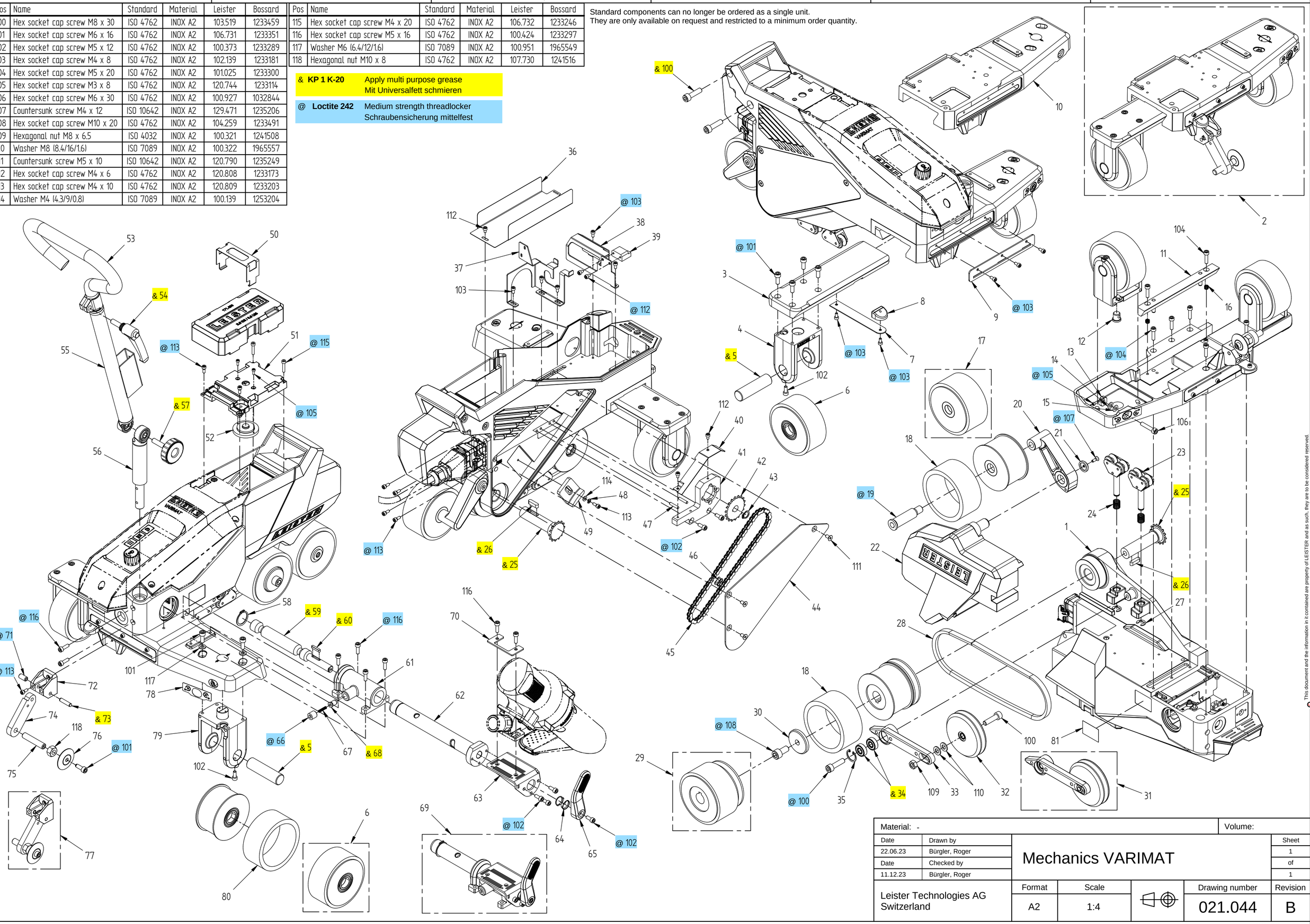


| Material: - | | | | Volume: |
|---|---|---|---|---|
| Date | Drawn by | Mechanics VARIMAT | | Sheet |
| 22.06.23 | Bürgler, Roger | | | 1 |
| Date | Checked by | | | of |
| 11.12.23 | Bürgler, Roger | | | 1 |
| Leister Technologies AG<br>Switzerland | Format | Scale | Drawing number | Revision |
| | A2 | 1:4 | 021.044 | B |

Model: 020958-0001.asm

This document and the information in it contained are property of LEISTER and as such, they are to be considered reserved. Therefore, any reproduction in any form or by any means, without prior written permission of LEISTER is forbidden.